Reg. No. | | | | | | | | | |

Question Paper Code : 12652

B.E / B.TECH DEGREE EXAMINATION, NOV / DEC 2016

Third Semester

B.E – Computer Science and Engineering

15CS301 – DATA STRUCTURES AND ALGORITHMS

(Regulations: Mepco – R2015)

Duration: 3 Hours Max. : 100 Marks

Answer ALL Questions

PART A – (10 × 2 = 20 Marks)

1. Define the terms used to quantify an algorithm.
2. Distinguish between sequential search and binary search.
3. State the advantages of doubly linked list over the singly linked list.
4. What do you know about post fix expression?
5. Name the two properties of binary heap.
6. State the purpose of balancing factor in AVL tree.
7. When does collision occur while inserting an element in to a hash table? Give an example.
8. What do you know about path compression?
9. Define minimum cost spanning tree.
10. Formulate the time complexity of topological sort.

PART B – (5 × 16 = 80 Marks)

11. a) i. Write an algorithm to perform sequential search and find its time complexity: best case, worse case and average case. (10 Marks)

11. a) ii. How recursive algorithms are differing from non recursive algorithms? (6 Marks)

OR

11. b) i. Develop a recursive algorithm to display the nth element in Fibonacci series with n elements. (10 Marks)

11. b) ii. Explain the importance of asymptotic notations in the analysis of algorithm. (6 Marks)

12. a) i. Derive an algorithm to find the following in a doubly linked list with n elements.

- Element with minimum value in the list
- Element with odd values in the list (8 Marks)

12. a) ii. Propose a data structure that supports the push and pop operations with suitable algorithm. (8 Marks)

OR

12. b) i. Convert the expression 4*(3+5)*12/2 into postfix format and evaluate the same using stack with a neat sketch. (8 Marks)

12. b) ii. Design a Queue ADT using Array implementation. (8 Marks)

13. a) i. Show the result of inserting 10,12,14,2,8,5,6,9,7,3 and 2 one at a time into an empty binary min heap. (8 Marks)

13. a) ii. Write down the function to insert element into an AVL tree with appropriate rotations. (8 Marks)

OR

13. b) i. Write the routines to insert and remove a node from binary search tree. (8 Marks)

13. b) ii. Show the steps to insert the following elements into an initially empty AVL tree 3,1,4,6,9,2,5,7 (8 Marks)

14. a) i. Given the input {4351,5323,3273,6199,8344,7579,9689} and a hash function of h(x)=x (mod 5), show the resulting separate chaining hash table and open addressing hash table using linear probing. (8 Marks)

14. a) ii. Explain in detail about find operation in set with an algorithm and example. (8 Marks)

OR

14. b) i. Show the result of the following sequence of instructions: union(1,2), union(3,4), union(3,5), union(1,7), union(3,6), union(8,9), union(1,8), union(3,10), union(3,11), union(3,12) when unions are Performed by size. (8 Marks)

14. b) ii. Identify the different collision resolution strategies while inserting an element into a hash table. Give a brief account on each of them. (8 Marks)

15. a) i. Represent the following graph using adjacency matrix and adjacency list.

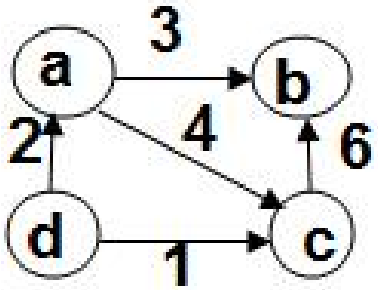

(6 Marks)

15. a) ii. Illustrate Depth First Search and Breadth First Search for the following graph with an algorithm.

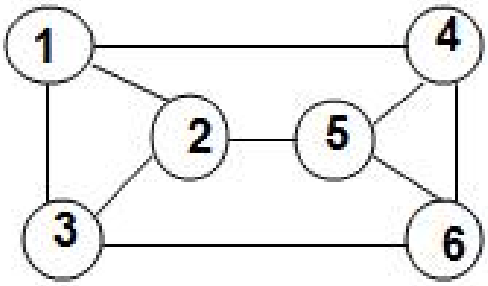

(10 Marks)

OR

15. b) i. Find the minimum spanning tree using Kruskal's algorithm and write down the algorithm.

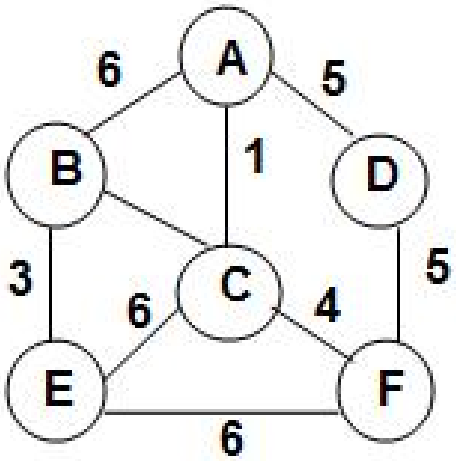

(10 Marks)

15. b) ii. Determine the shortest path of the following graph from vertex V1 to all other vertices.

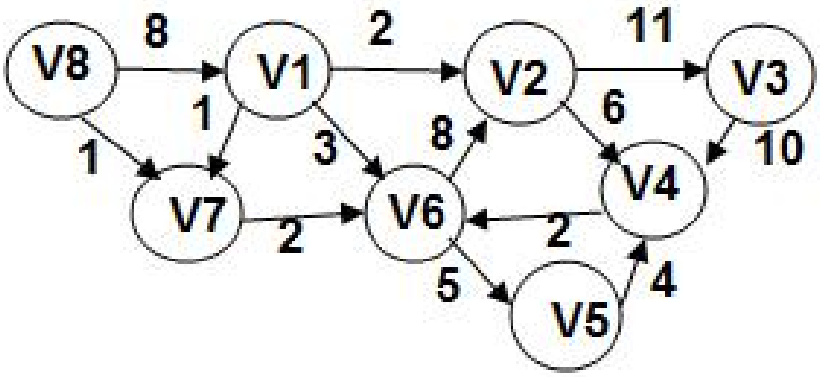

(6 Marks)